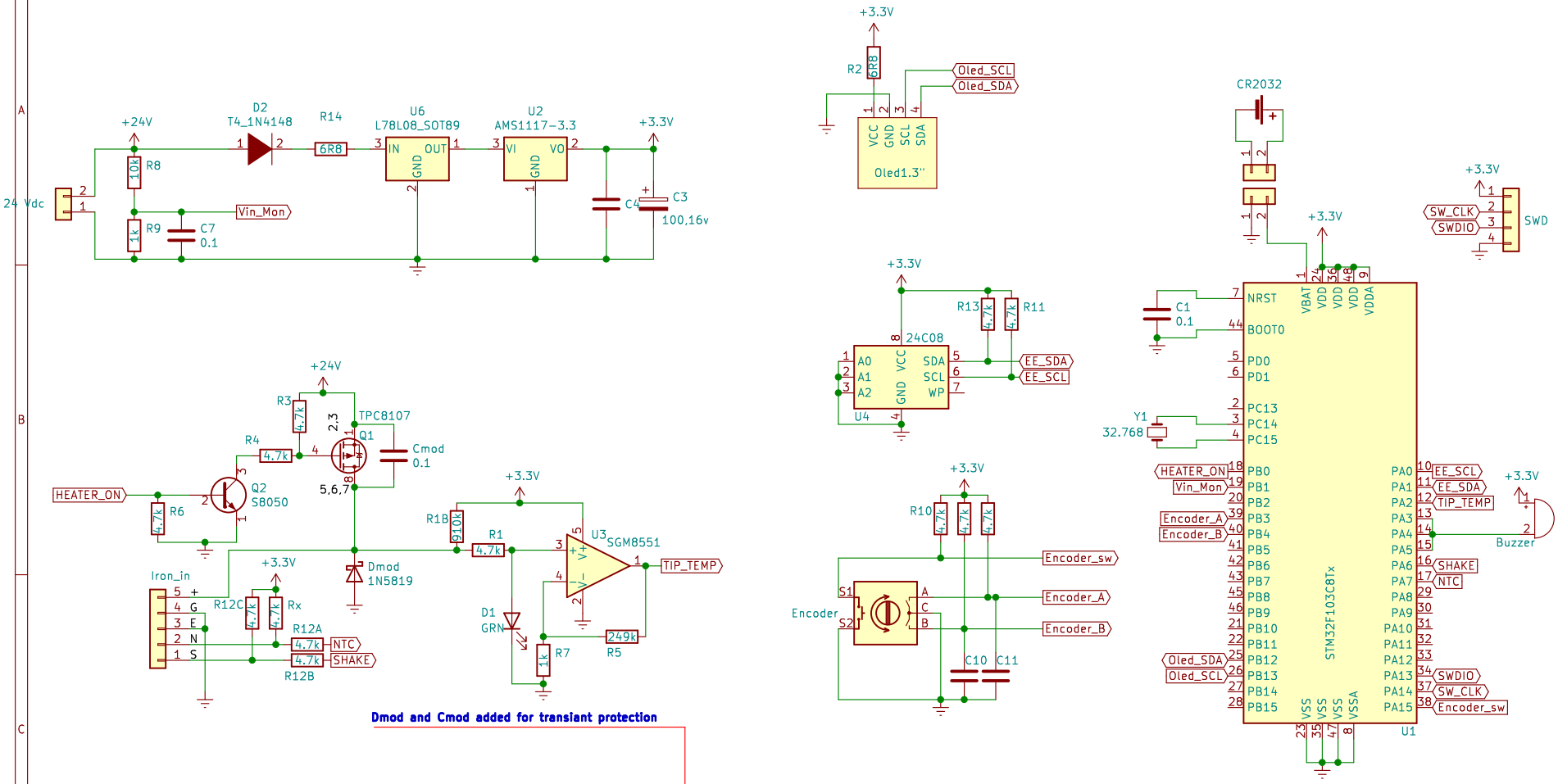

Dmod and Cmod added for transiant protection

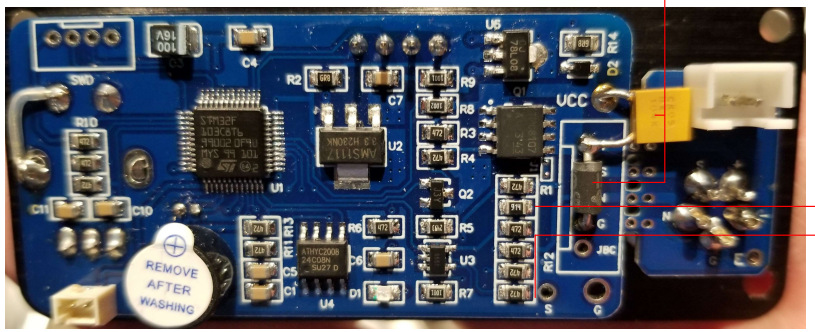

MINDSTORM88

Sheet: /

File: KSGER_T12.sch

Title: KSGER T12 SOLDERING STATION V2.1S

Size: USLetter	Date: 2022-04-07	Rev: 1
KiCad E.D.A. kicad (5.1.10)-1		Id: 1/1